PCO®

HID HIGHBAY SERIES

MODELS IN SERIES

HID Highbay Series (With 18" Aluminium reflector)	HID Highbay Series (With 22" Aluminium reflector)	HID Highbay Series (With 22" Acrylic reflector)
HID Highbay Series (With 15" White Painted Aluminium Reflector)		

BOEING

PCO®

HID HIGHBAY SERIES

GENERAL INFORMATIONS

Light Source	HID
Main Voltage	220-240V AC , 50-60Hz
Control Gear	CCG
	ECG (Optional)
Shade Dimension	12" & 18" (only available for aluminium shade)
	22" (only available for aluminium & acrylic shade)
Diffuser Material (Optional)	Tempered Glass (only available for aluminium shade)
	Arcylic Visor (only available for acrylic shade)
Additional Gear (Optional)	Auxilliary Lighting Device (optional addition)
Capacitor	Eastern
Ignitor	PCO Superimposed Ignitor
Ballast	PCO High Pressure Ballast
Gear Compartment Nature	Removable
Lampholder Material	Ceramic
Lamp	Bulb
Lamp Holder (s)	E27 / E40
Cable Type (Internal)	1/1.13mm PVC (105°C)
Gear	Sodium, Metal Halide & Mercury
Housing Material	0.70mm Cold Rolled Steel sheet
Housing Finishing	Epoxy powder coating
Mounting	Pendant
Luminaire Classification	Class 1
Ingress Point	IP 20
Ambient temperature	45°C
Warranty	2 years

MODEL INFORMATIONS

Models	Number of Lamp (s)	Lamp Power (W)	Lamp Holder	Gear	System Current	Capacitor	Weight (Kg)	Packing (Unit/Box)	Delivery
PCHB 70S	1	70	E27	SON	1.0	12.0 uf	3.7	1	M
PCHB 150S	1	150	E40	SON	1.8	20.0 uf	5.0	1	M
PCHB 250S	1	250	E40	SON	3.0	35.0 uf	6.4	1	M
PCHB 400S	1	400	E40	SON	4.4	40.0 uf	7.3	1	M
PCHB 70MH	1	70	E27	Metal Halide	1.0	12.0 uf	3.85	1	M
PCHB 150MH	1	150	E27	Metal Halide	1.8	20.0 uf	5.0	1	M
PCHB 250MH	1	250	E40	Metal Halide	3.0	30.0 uf	6.4	1	M
PCHB 400MH	1	400	E40	Metal Halide	3.5	35.0 uf	6.8	1	M
PCHB 125M	1	125	E27	Mercury	1.15	10.0 uf	3.85	1	M
PCHB 250M	1	250	E40	Mercury	2.15	16.0 uf	5.2	1	M
PCHB 400M	1	400	E40	Mercury	3.25	30.0 uf	6.5	1	M

SHADE OPTIONS

Aluminium - 18"	Aluminium - 22"

DIFFUSER OPTIONS

18" Tempered Glass	22" Tempered Glass

DRAWING

HID Highbay Series		
Front View	Side View	Top View
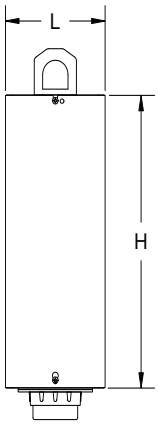	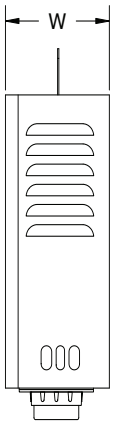	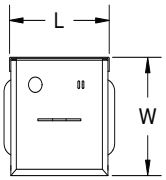

Dimension (mm)	L	W	H
	118.0	123.0	305.0

POLAR INTENSITY DIAGRAM

PCHB 70MH	PCHB 150MH	PCHB 400MH
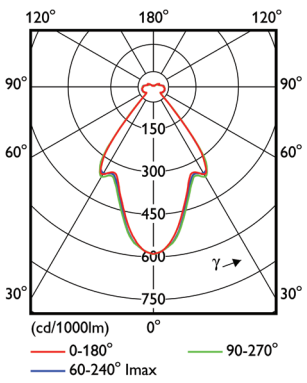	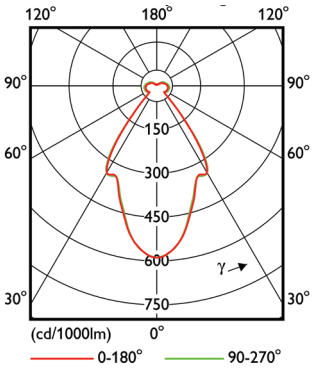	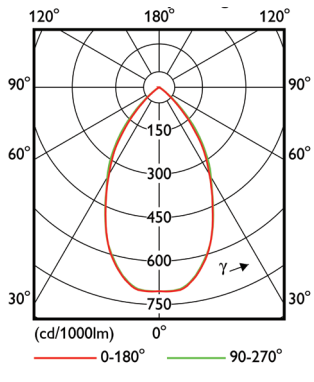

PCO®

HID HIGHBAY SERIES

GENERAL INFORMATIONS

Light Source	HID
Main Voltage	220-240V AC , 50-60Hz
Control Gear	CCG
	ECG (Optional)
Shade Dimension	15" White Painted Aluminium Reflector
Diffuser Material (Optional)	Tempered Glass (only available for aluminium shade)
	Arcylic Visor (only available for acrylic shade)
Additional Gear (Optional)	Auxilliary Lighting Device (optional addition)
Capacitor	Eastern
Ignitor	PCO Superimposed Ignitor
Ballast	PCO HPMHV
Lampholder Material	Ceramic
Lamp	Bulb
Lamp Holder (s)	E27
Cable Type (Internal)	1/1.13mm PVC (105°C)
Gear	Metal Halide
Housing Material	0.50mm Cold Rolled Steel sheet
Housing Finishing	Epoxy powder coating
Mounting	Pendant
Luminaire Classification	Class 1
Ingress Point	IP 20
Ambient temperature	45°C
Warranty	2 years

MODEL INFORMATIONS

Models	Number of Lamp (s)	Lamp Power (W)	Lamp Holder	Gear	System Current	Capacitor	Weight (Kg)	Packing (Unit/Box)	Delivery
PCHB 70MH	1	70	E27	Metal Halide	1.0	12.0 uf	TBA	1	M
PCHB 150MH	1	150	E27	Metal Halide	1.8	20.0 uf	TBA	1	M

DRAWING

HID Highbay Series

Front View

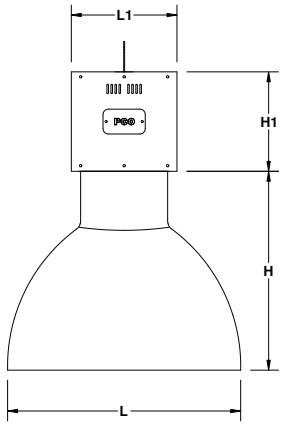

Dimension (mm)	L	L1	H	H1
	375.0	170.0	320.0	160.0

PRODUCT PICTURE

ICONS IN THIS CATALOG

PRODUCT HIGHLIGHT

PCO LINEAR LED SYSTEM (PLS)

HANGING TYPE ACCESS

MAX.-3M OF IGNITION DISTANCE

EPOXY POWDER COATING

M16 LAMP

AUXILARY LIGHTING DEVICE

CAT. 2

LONG LIFETIME

EASY TO INSTALL

COLD ROLLED SHEET

LED INDICATOR

HEAT SINK

UNIVERSAL CEILING BRACKET

TWIST TO LOCK

POLYCARBONATE LAMPHOLDER

PUSH TO TEST BUTTON

BATTERY

KEY LOCK OR PAD LOCK OPTIONS

PUSH IN TYPE CONNECTOR

MAINTAINED MODE OPERATION

NON-MAINTAINED MODE OPERATION

DIE CAST ALUMINIUM

WIRE GUARD

POLYMER PLASTIC INDIRECT REFLECTOR

HIGH QUALITY ANODISED ALUMINIUM LOUVRE

HAMMER TONED ALUMINIUM REFLECTOR

VARIOUS REFLECTOR OPTION

STUCCO EMBOSED ALUMINIUM REFLECTOR

RIBBED ALUMINIUM CROSS BLADE

PRISMATIC DIFFUSER

PYRAMID SHAPE DIFFUSER

METAL & ALUMINIUM

CHROME TYPE CAP SCREW

ADJUSTABLE M8 SCREW TYPE STUD

HEAT PROOF TEMPERED GLASS

SCREWLESS TOP COVER

M10 HANGING HOOK

POLYCARBONATE HINGE LOCK

STAINLESS STEEL RETAINER CLIP

SILICON RUBBER GASKET

IP RATING

SLIM TYPE CASING

SEPARATED CONTROL GEAR TRAY

ELECTRONIC CONTROL GEAR

REMOVABLE CONTROL GEAR

CONTROL GEAR

VARIOUS DIFFUSER OPTION

'V' TYPE LOUVRE LOCKING CLIP

DIPPED IN HIGH QUALITY VARNISH

WINDOW TYPE CONTROL GEAR ACCESS

STAINLESS STEEL ALLEN KEY

PURE COPPER COIL

H SILICON STEEL STACK ('C' & 'T')

H SILICON STEEL STACK ('E' & 'I')

HIGH POWER POLYESTER FILLED RESIN

PURE ALUMINIUM DEEP DRAWN CANOPY

NO 'ZEBRA' EFFECT

TOP ACCESS MAINTENANCE

FULL BOWL REFLECTOR

AERO DYNAMIC DESIGN

OPTIONAL GEAR

DIMMING CAPABILITY

SMART SENSOR

MOTION SENSOR

DALI SYSTEM

PRODUCT APPLICATION

BANK

COMPUTER LAB

BRIDGE

COVE LIGHT

CYCLE PAVEMENT

FACTORY

ELEVATOR

FENCING

FUEL STATION

STADIUM

GALERY

GARAGE

GARDEN

TERMINAL

HIGHWAY

RESIDENTIAL

HOTEL

HYPERMARKET

LAB

LIBRARY

WAREHOUSE

MEETING ROOM

MONUMENT

MULTI PURPOSE HALL

OFFICE

PARKING YARD

SUBWAY

SCHOOL

SECURITY OFFICE

SHOP

SHOW ROOM

SPORT COMPLEX

FUTSAL

GYMNASIUM

TENNIS COURT

PLAYGROUND